FlexShade® UpLift

Cordless operated manual shade with available fascia

INSTRUCTIONS
INSTALLATION & OPERATION

Overview - **Components**

FLSHADE UPLIFT

Please Note:
Your UpLift FlexShade operator has been pre-rotated to optimize spring tension. See roller label for number of pre-rotations. If shade tension requires additional adjustment, see Page 7.

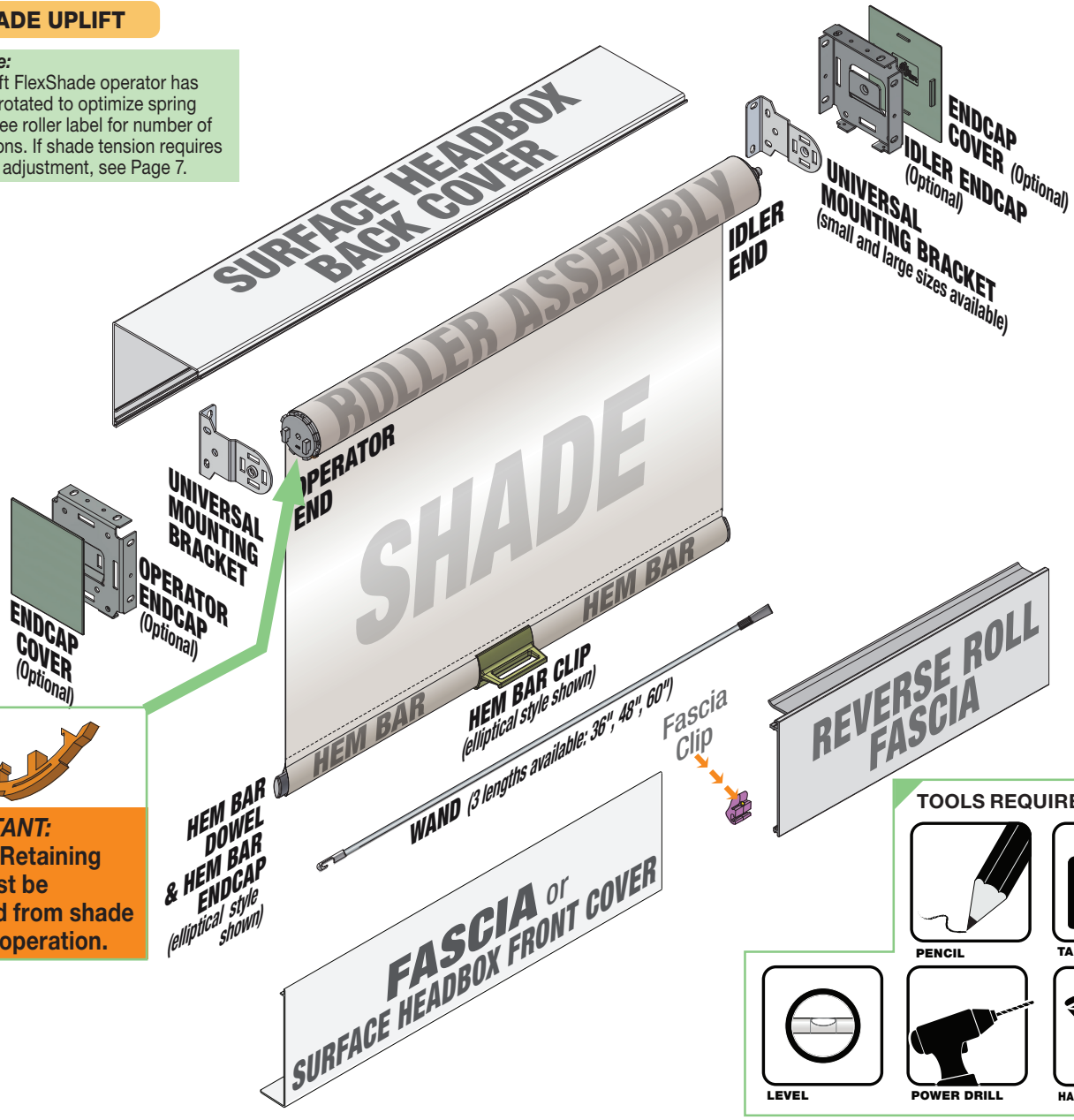

IMPORTANT:
Orange Retaining Clip must be removed from shade prior to operation.

TOOLS REQUIRED

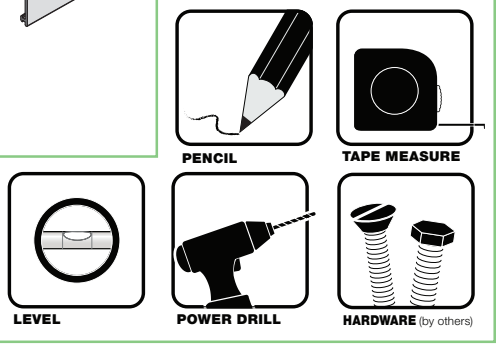

⚠ CAUTION ⚠

Read and understand all warnings *(Page 2 of this document)* ***before beginning installation.***

Contents

Overview - **Components**....1
PLEASE READ - **Important Safety & Installation Information**....2
PLEASE READ - **Field Adjustments, Cleaning and Maintenance**....2
Section 1 - **Installing Mounting Brackets or Endcaps**....3
Section 2 - **Endcap or Bracket-Only Shade Installation Option**....4
Section 3 - **Surface Headbox Installation Option**....5
Section 4 - **Fascia Installation Option**....6
Section 5 - **Shade Operation**....7
Section 6 - **Adjusting Shade Tension**....7
Section 7 - **Hardware Dimensions**....8
Section 8 - **Overall Dimensions**....8

If you have any difficulties installing or servicing your FlexShade UpLift, call your dealer or Draper, Inc.

DRAPER®

Draper, Inc. | 411 S. Pearl St. Spiceland, IN 47385
draperinc.com | 765.987.7999 | 800.238.7999

© 2025 All Rights Reserved | **FORM: FS_Uplift_Inst25**

PLEASE READ - **Important Installation Information**

⚠ ***Caution:***

1. Inspect all boxes to make sure you have received the proper shades and parts. Controls may be shipped separately, or in same carton as shades.
2. Open cartons lengthwise, taking care not to cut into cardboard shipping container.
3. Before mounting shades, verify measurements on label provided with shade, and ensure unit is installed at correct width.
4. All hardware must be installed level. Shades must be level and square.
5. Read the following installation guidelines thoroughly and follow them carefully. Failure to do so may cause product to fall or otherwise fail, and invalidates warranty.
6. Installer is responsible for selecting mounting hardware appropriate for site conditions.
7. UpLift operator should not be used with products or pockets having a bottom closure without written permission from Draper.

PLEASE READ - **Safety Information**

Important Safety Information ⚠ **WARNING** ⚠ ***Important Safety Information***

Improper installation and use of the FlexShade® UpLift can result in serious injury or death. Primarily, injuries can occur if the unit falls due to imprecise installation, mishandling of the unit during installation, or installation on an insufficient wall or ceiling structure. Please use extreme care.

1. Please read the following installation guidelines thoroughly and follow them carefully. Failure to do so may cause product to fall or otherwise fail, and could result in serious injury.
2. Installation and calibration of the shade should only be performed by an authorized, qualified, and experienced professional.
3. Do not affix the unit to wall or ceilings that have inadequate strength to permanently hold the unit during use. It is the owner's and installer's responsibility to confirm the wall or ceiling to which the unit attaches is sufficient to permanently hold the weight and stress loads of the unit at all times. Draper®, Inc., is not responsible for improper installation, application, testing, or workmanship related to the product at place of installation.
4. It is the installer's responsibility to make sure appropriate fasteners are used for mounting.
5. All brackets, fascia, headboxes, pockets, wall clips, and other hardware must be installed level. Shade unit must be level and square.
6. Before testing or operation, carefully inspect the entire area and path of the shade and areas underneath the shade to be sure no persons or objects are in the area.
7. During testing or operation, carefully watch the surrounding area for any potential safety concerns including nearby persons or objects.
8. After installation, the entire system should be carefully tested to ensure safe and normal operation. Extreme care should be taken during testing to remain clear of moving parts to avoid possible injury.
9. Operation of shade should be performed only by authorized and qualified personnel, who have been trained in the safe and effective operation of the shade and understand its safety features.
10. The safety features of the shade should never be disabled, bypassed, or overridden. The system should not be operated until all safety features are properly and completely installed, calibrated, and tested.
11. Shade may need to comply with local, state, or district rules and regulations, in particular when installed in schools. All applicable rules and regulations should be reviewed before installation and use.
12. Failure to precisely follow installation guidelines invalidates all warranties.
13. Custom products/installations may not be reflected in this manual. Call Draper, Inc., if you have questions regarding your installation.

Before Beginning Installation

1. Look for any job site conditions that could interfere with installation or operation of the system.
2. Read carefully and be sure to understand all installation instructions and all related operations manuals. These instructions are intended to serve as a guide for the installer and owner. They should be followed closely and combined with the expertise of experienced qualified installers. Draper, Inc., is not responsible for improper installation, application, testing, or workmanship related to the product at place of installation. Please retain all instructions for future use.
3. Open cartons lengthwise, taking care not to cut into cardboard shipping container.
4. Locate and lay out all pieces.
5. Inspect all boxes to make sure you have received the proper shade and parts. Controls may be shipped separately, or in same carton as shade.
6. If you have any difficulties with installing, servicing, or operating your shade, call your dealer or Draper, Inc., 765-987-7999.

PLEASE READ - **Field Adjustments**

Each Draper Shade is tested to ensure proper operation. Even with this testing, some field adjustments may be needed for telescoping.

If the shade is telescoping, place a piece of shimming fabric into the fabric roll when the shade is deployed on the side that the fabric will be drawn toward. For example: if the fabric is tracking to the left, place the shimming fabric on the right side.

PLEASE READ - **Cleaning and Maintenance**

Window covering products manufactured by Draper, when properly installed, should require no operational maintenance or lubrication.

Most standard Draper fabrics may be cleaned at the window by vacuuming with a soft brush attachment. They also may be cleaned by using a sponge or soft cloth and mild solution of warm soapy water. A mild dishwashing liquid is recommended. A clean dry cloth is recommended for the metal finish.

Please Note: Exceptions are GreenScreen Evolve®, GreenScreen Revive®, and Phifer® SW7000 fabrics, which must be cleaned with a dry art sponge.
(GreenScreen Revive® and GreenScreen Evolve® are registered trademarks of Mermet® USA. SheerWeave® is a registered trademark of Phifer® Incorporated.)

Section 1 - **Installing Mounting Brackets or Endcaps**

IMPORTANT: Brackets or Endcaps must be installed parallel, plumb, and square, with a tolerance of +/- ⅛" *(3mm)*. Verify unit measurements and ensure unit will fit in the desired location.

Please Note: Installer is responsible for selecting mounting hardware appropriate for site conditions.

WARNING: UpLift operator should not be used with products or pockets having a bottom closure without written permission from Draper.

UNIVERSAL MOUNTING BRACKETS INSTALLATION

1. Mark wall, jamb, or ceiling for placement of mounting brackets.

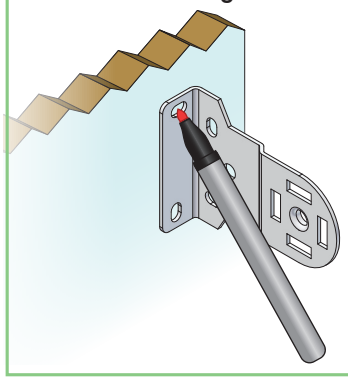

2. Drill small starter hole *(if necessary)* in mounting surface.

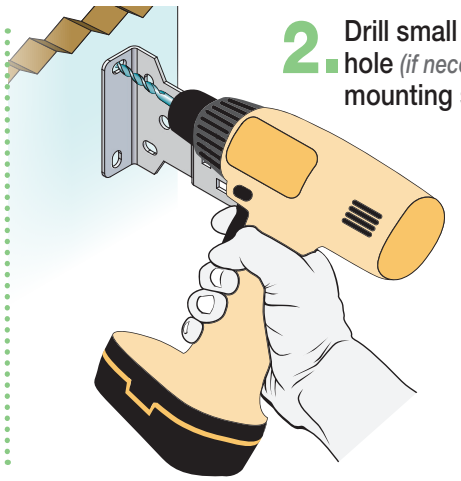

3. Mount brackets using appropriate fasteners for surface.

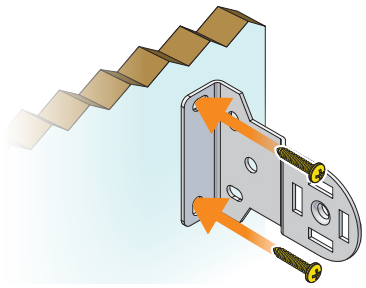

ENDCAP INSTALLATION

1. Mark wall, jamb, or ceiling for placement of mounting endcaps.

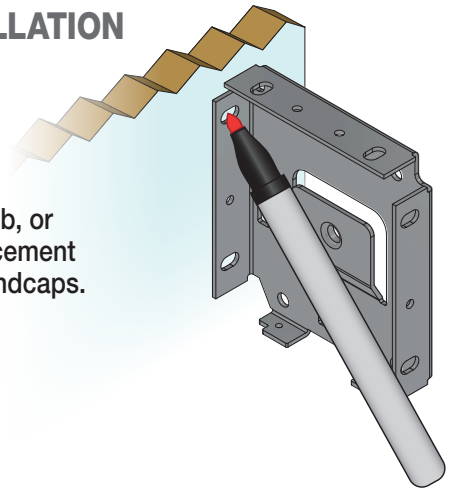

2. Drill small starter hole *(if necessary)* in mounting surface.

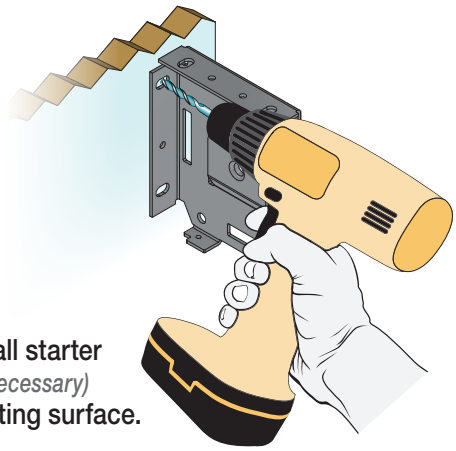

3. *(Optional)* Snap endcap covers onto endcaps.

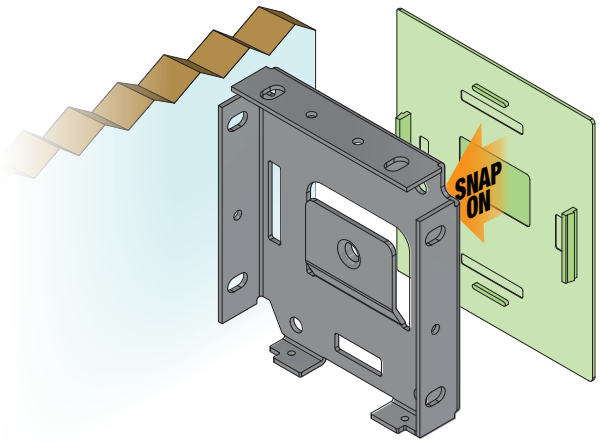

4. Mount endcaps using appropriate fasteners for surface.

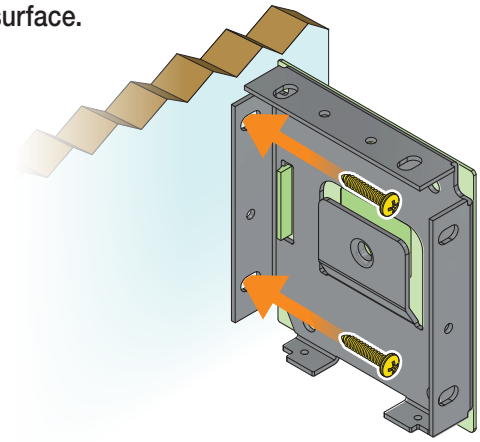

Section 2 - **Endcap or Bracket-Only Shade Installation Option** *(Small or Large Bracket or Endcap Hardware)*

Please Note:
ALWAYS START AT THE IDLER END OF SHADE. This varies from left to right, depending on whether installation is standard roll or reverse roll.

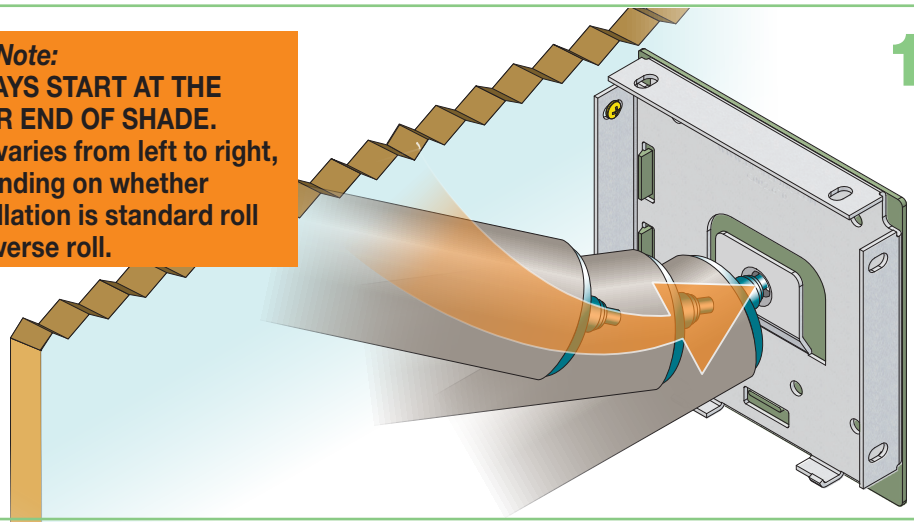

1. Place spring-loaded pin into idler end of the bracket or endcap. *(Large endcap shown.)*.

2. Depress pin by pushing shade roller toward bracket or endcap.

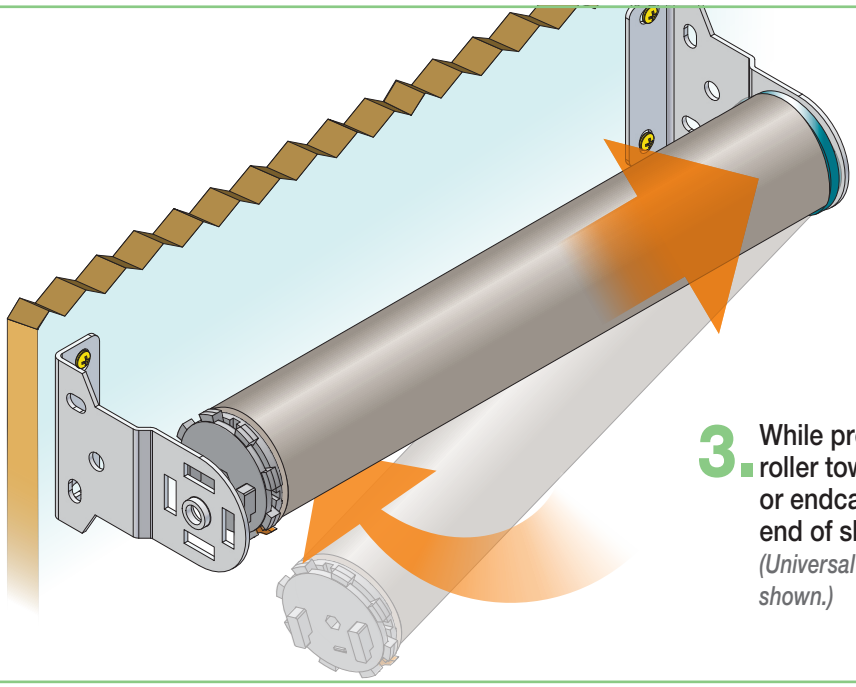

3. While pressing shade roller toward idler bracket or endcap, swing operator end of shade into position. *(Universal mounting bracket shown.)*

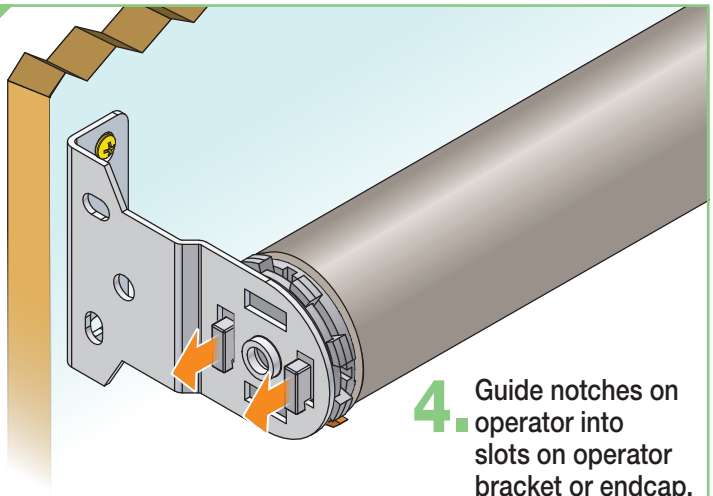

4. Guide notches on operator into slots on operator bracket or endcap. *(Universal mounting bracket shown)*

5. Remove orange retainer clip.

WARNING: **Do not operate shade with retainer clip installed!**

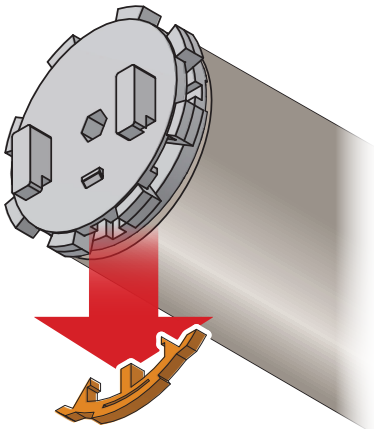

Section 3 - **Surface Headbox Installation Option** *(Small or Large Endcap Hardware ONLY.)*

Please Note: Installer must provide adequate clearance for removal of Roller Assembly during installation and maintenance.

Please Note: Headbox MUST BE mounted directly to ceiling or wall, or to a continuous blocking that has been secured to building structure.

Please Note: **ALWAYS START AT THE IDLER END OF SHADE. This varies from left to right, depending on whether installation is standard roll or reverse roll.**

1. Place endcaps into top/back cover pieces of ceiling/wall headbox.

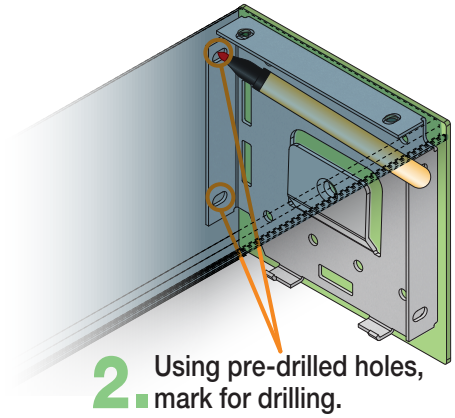

2. Using pre-drilled holes, mark for drilling.

3. Drill holes in back *(wall mount)* or top *(ceiling mount)* of top/back cover pieces.

4. Attach endcaps and top/back cover pieces to wall or ceiling, using mounting hardware appropriate for site conditions.

Please Note: A minimum of two *(2)* screws is required for each endcap.

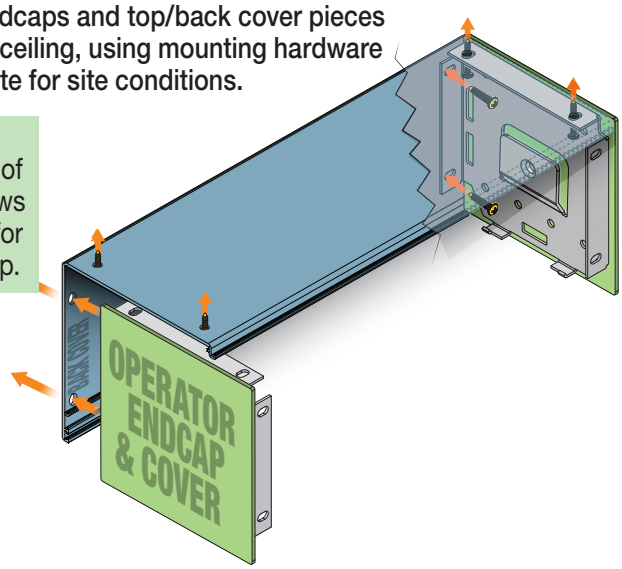

5. A. Place spring-loaded pin into idler endcap.

B. Depress pin by pushing shade roller toward endcap.

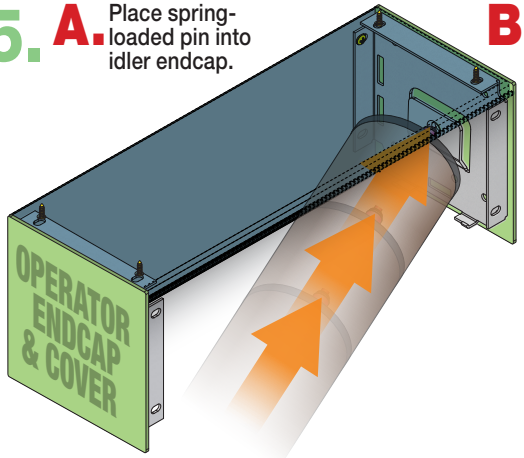

C. While pressing shade roller toward idler endcap, swing operator end of shade into position.

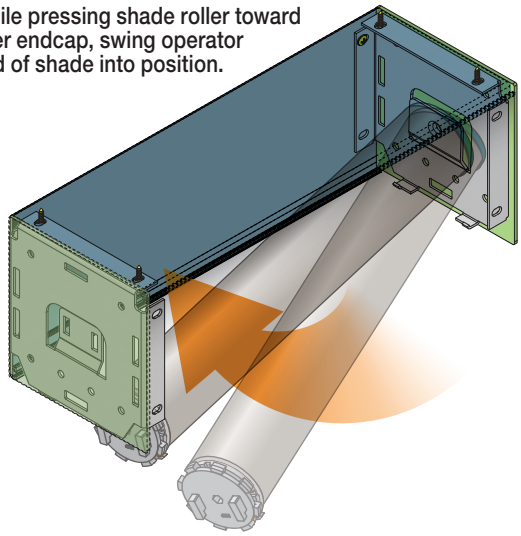

D. Guide notches on operator into slots on operator endcap.

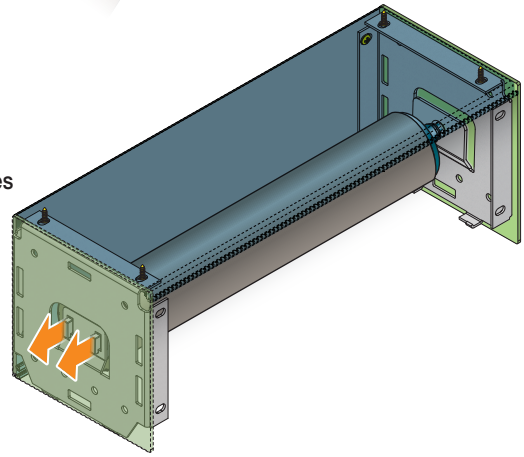

6. Remove orange retainer clip.

WARNING: **Do not operate shade with retainer clip installed!**

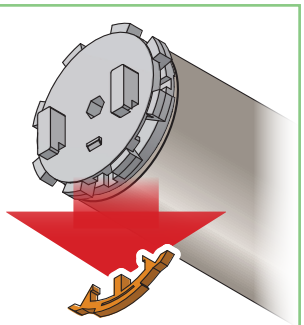

Section 4 - **Fascia Installation Option** *(Small or Large Endcap Hardware ONLY.)*

Please Note:

- ***Endcaps must be installed the correct distance apart for fascia to be properly attached with full engagement.***
- ***Fascia is not fully seated until it clicks into place on both ends.***
- ***Once in place, check for secure fit. If not secure, use an appropriate fastener*** *(not included)*.

STANDARD ROLL FASCIA

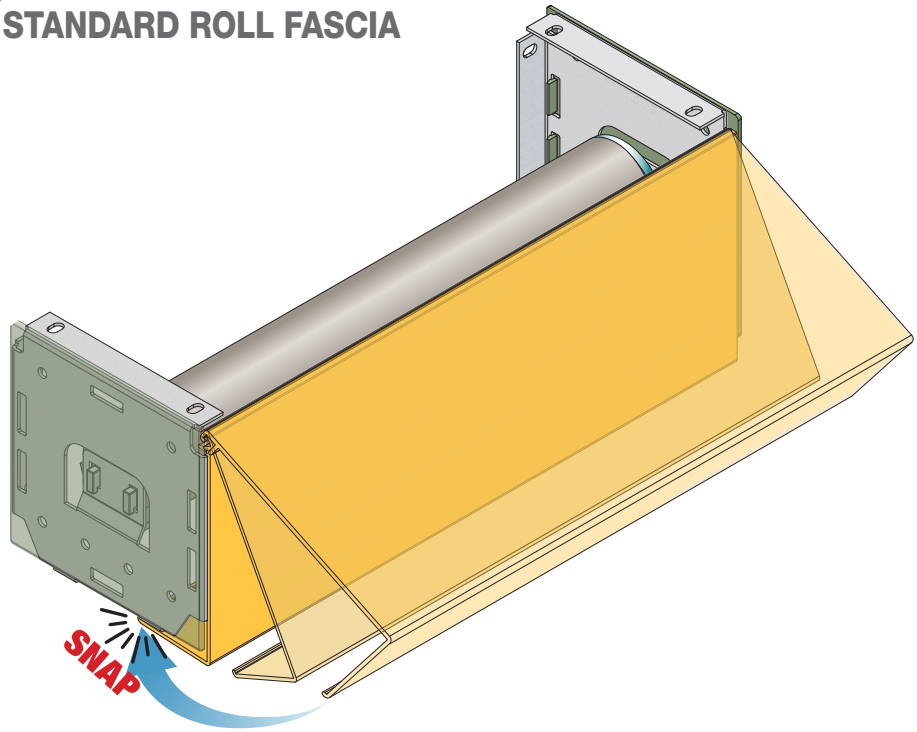

1. Place groove along top of fascia over endcaps.

STEP 1:

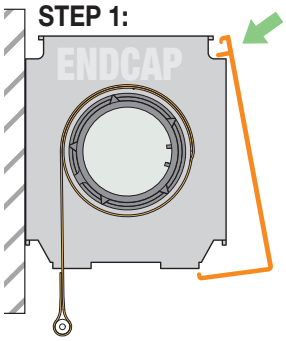

2. Snap into place.

STEP 2:

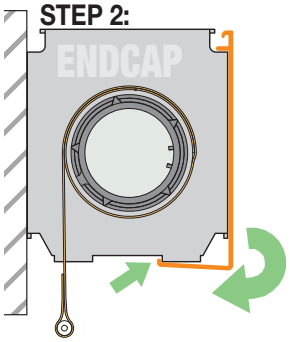

REVERSE ROLL FASCIA

1. Slide fascia clip onto fascia.

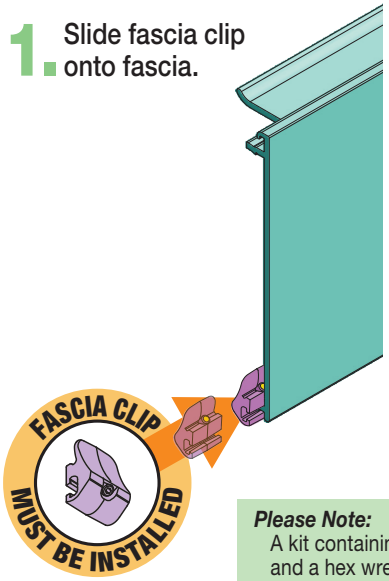

2. Hang fascia on room side of endcap.

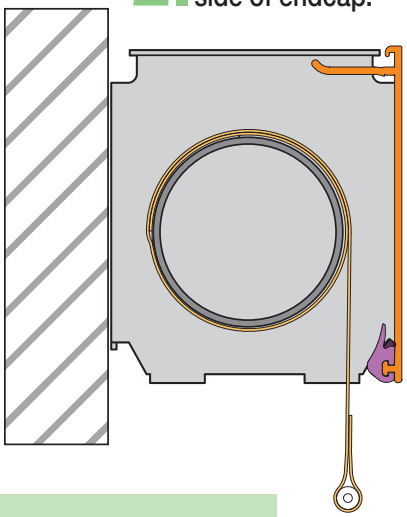

Please Note:
A kit containing two clips and a hex wrench is supplied per each piece of fascia.

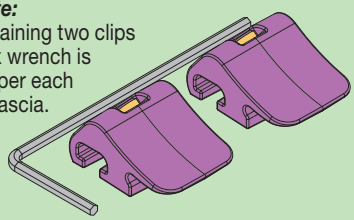

3. Slide clip to end of fascia, ensuring that the clip covers mounting bracket of endcaps.

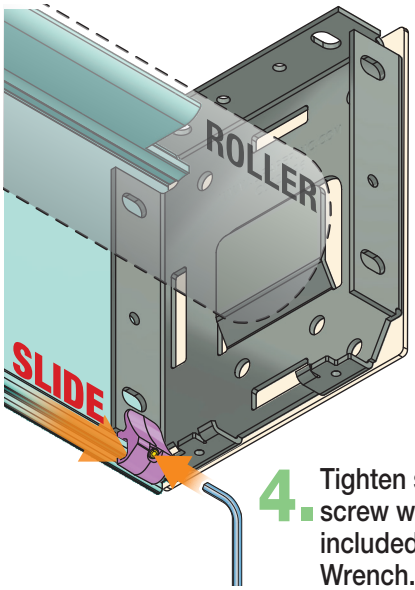

4. Tighten set-screw with included Hex Wrench.

Section 5 - **Shade Operation**

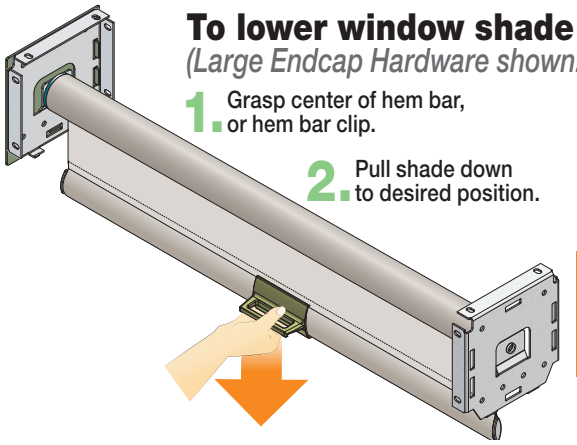

To lower window shade

(Large Endcap Hardware shown.)

1. Grasp center of hem bar, or hem bar clip.
2. Pull shade down to desired position.

CAUTION: Do not expose shade roller by pulling shade fabric too far down.

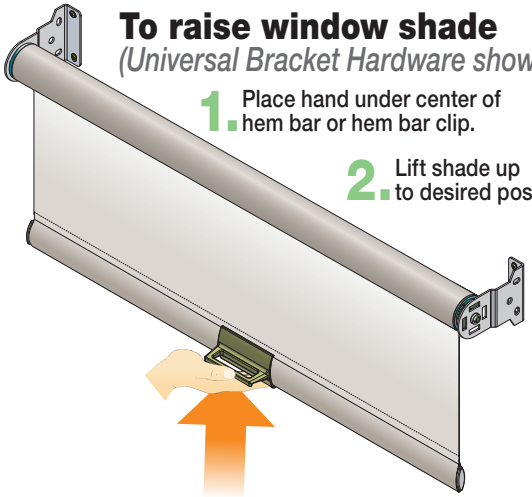

To raise window shade

(Universal Bracket Hardware shown.)

1. Place hand under center of hem bar or hem bar clip.
2. Lift shade up to desired position.

Pull-Down Wand

The ***Pull-Down Wand*** *(Part Number C061.051)* can be ordered separately to assist in raising and lowering shades installed in a less accessible manner.

Please Note: Available in 3 sizes: 36", 48", 60".

Section 6 - **Adjusting Shade Tension**

Please Note: Adjusting the spring ***does not*** adjust the speed of the shade.

1. If shade does not stop but continues moving ***DOWN***, adjust the spring force by adding pre-turns by hand or by using spanner tool C254.014 *(available to order seperately)*, turning adjuster ring *(shown here in orange)* ***counter-clockwise*** for Standard installations, and ***clockwise*** for Reverse Roll installations.

A. Grasp the adjuster ring while holding onto the roller. Turn both together in the desired direction as far as possible.

B. Release the adjuster ring and rotate the roller back to the starting position.

C. Repeat this ratcheting motion as many times as necessary.

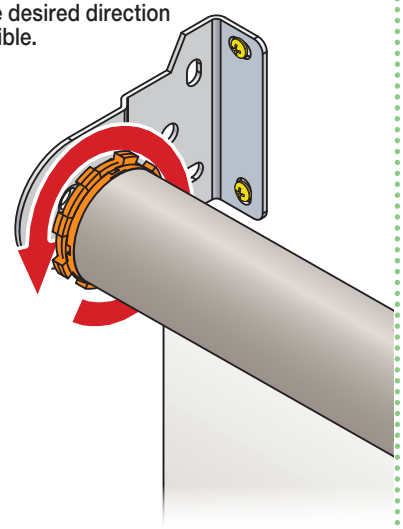

2. If shade does not stop but continues moving ***UP***, adjust the spring force by subtracting pre-turns by hand or by using spanner tool C254.014 *(available to order seperately)*, turning adjuster ring *(shown here in orange)* ***clockwise*** for Standard installations, and ***counter-clockwise*** for Reverse Roll installations.

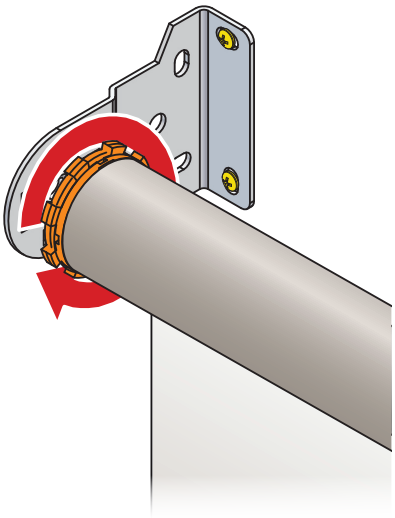

Section 7 - **Hardware Dimensions**

Small Endcap

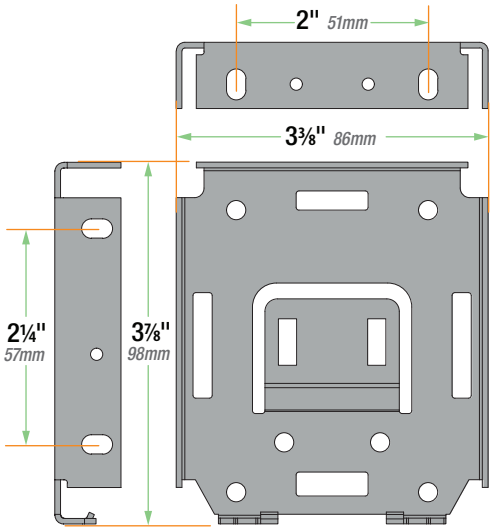

Large Endcap

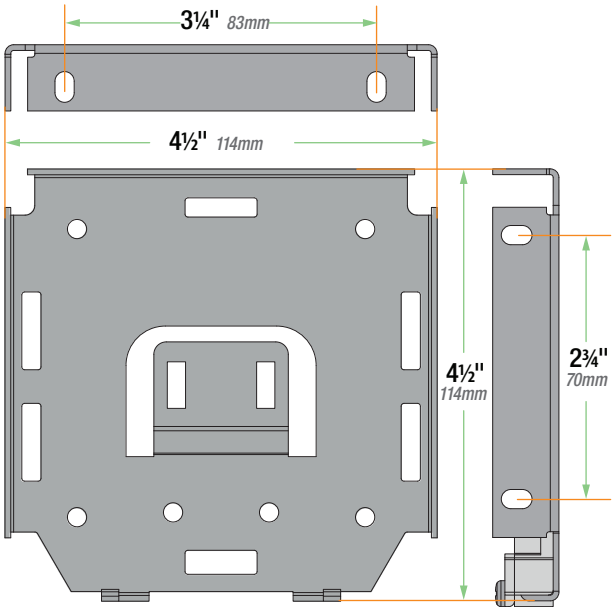

Small Universal Bracket

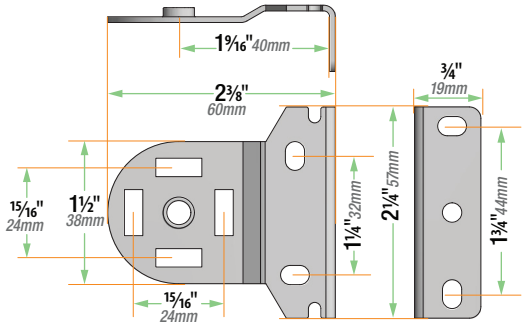

Large Universal Bracket

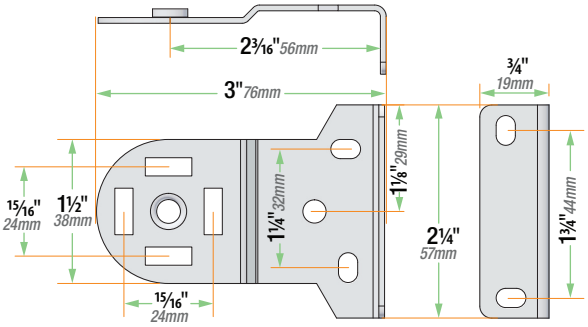

Section 8 - **Overall Dimensions**

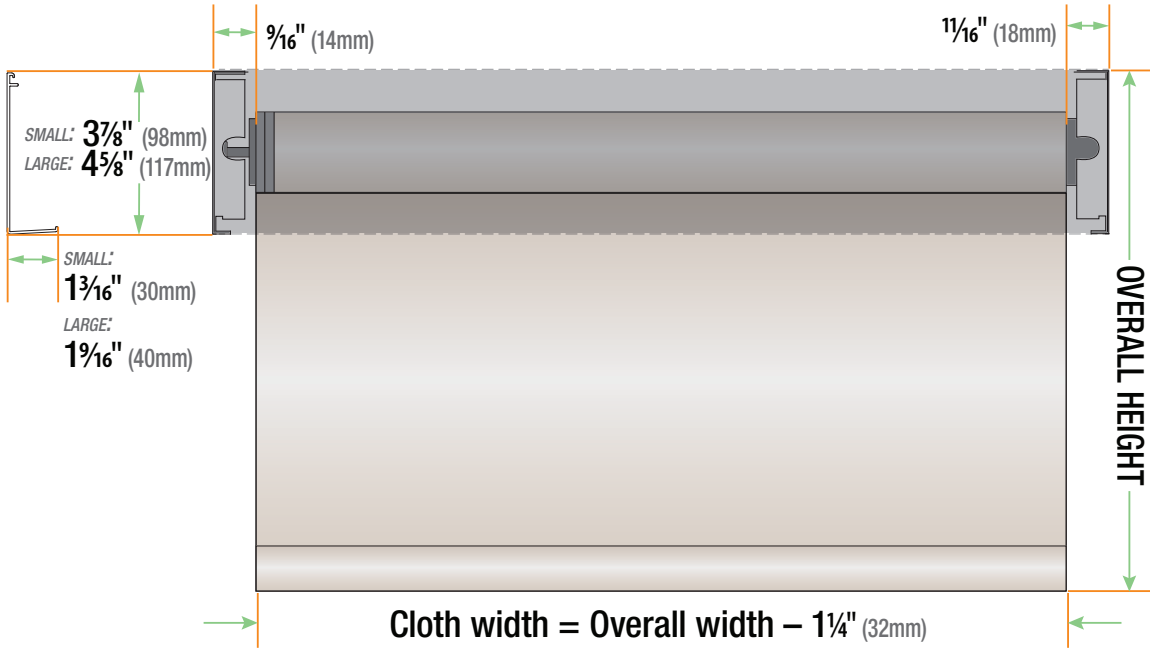

Shade Overall Width includes optional plastic endcap covers:

- Pair of small endcap covers equals ⅛" *(3.2mm)* of the Overall Width.
- Pair of large endcap covers equals ³⁄₁₆" *(4.8mm)* of the Overall Width.

Note: Remember to subtract these amounts if optional endcap covers are ***NOT*** used.